LIONEL LOUEKE TRIO STAGE PLOT

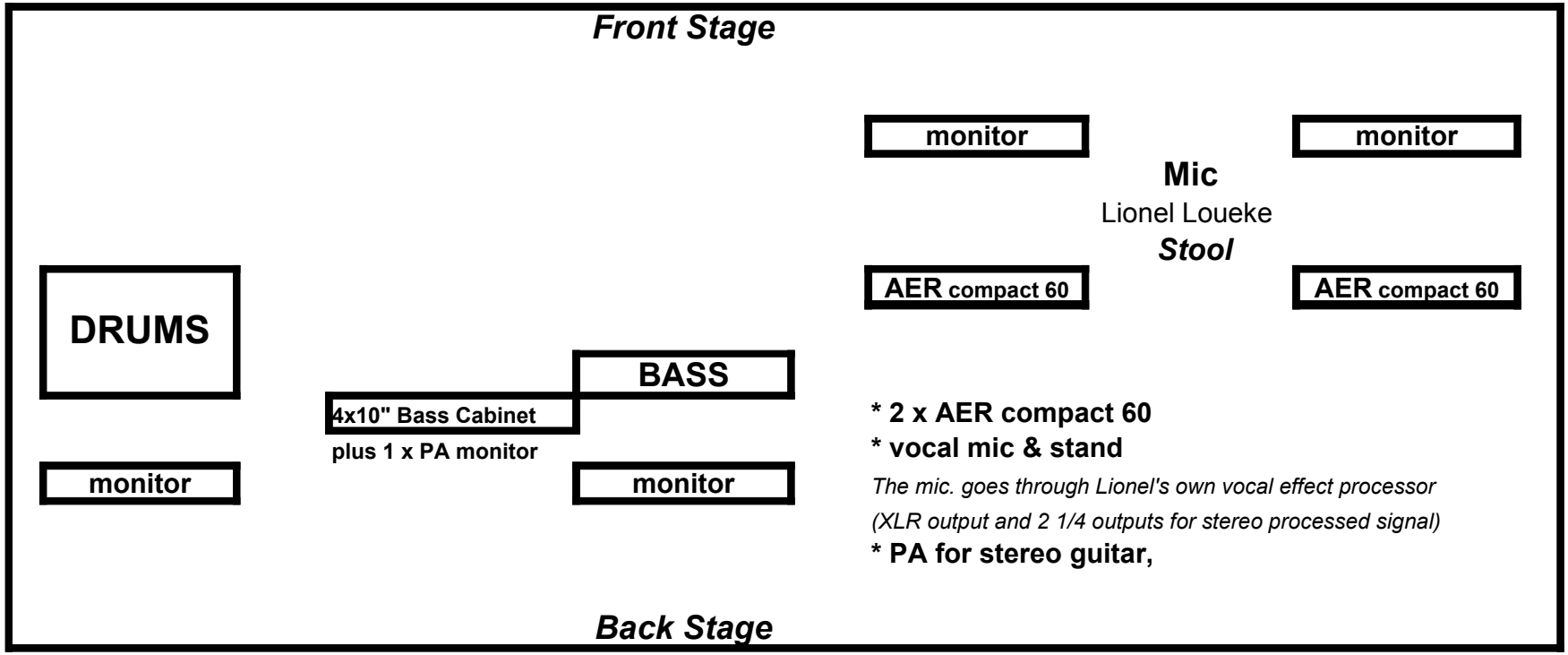

Questions: Xavier Felgeyrolles / Blue Geodesics / +33 (0) 603213532 / mail: bluegeo@bluegeo.com